ADVANCED GOURMET
EQUIPMENT & DESIGN

ICE CREAM DISPLAY CABINET

CIAO series

E

Maintenance

And Use Manual

Mail: PO Box 18542, Greensboro, NC 27419
Street: 5C Wendy Ct, Greensboro, NC 27409
Phone: 336-856-2919
Fax: 336-217-8838
Email: sales@AdvancedGourmet.com
Web: www.AdvancedGourmet.com

1. INTRODUCTION

PRESENTATION

Dear Client,

Ciam is pleased to number you among its customers and relies the bought machine will match your expectation. In order to get the best performances of the machine, we recommend you to follow all suggestions and instructions, which are included in this manual.

1.2. HOW TO USE THE MACHINE

- *PERMITTED USES*

This refrigerated display cabinet has been manufactured for **ice cream** presentation and sell.

- *NOT PERMITTED USES*

It is absolutely forbidden the use of the refrigerated display cabinet for **pharmaceutical products**.

1.3. RESPECTED NORMS

The refrigerated display cabinet has been manufactured in respect of the safety issues relevant to the following norm:

- **Machinery Directive** N° 2006/42/CE : CE marking for machinery
- **Directive** N° 2006/95/CE : Low tension
- **Directive** N° 2004/108/CE : Electro-magnetic Compatibility
- **Directive** N° 97/23/EC (P.E.D.) : European Pressure Equipment
- **Norm** CEI 17-13/1 (EN 60439/1) : Realization of Electric Installations
- **Norm** CEI EN 60335-1 (CEI 61-150) : Safety of household and similar electrical appliances
- **Norm** CEI EN 60335-2-24 (CEI 61-56) : Special norms for refrigerators, freezers and ice machines

For ETL marked cabinet:

- **UL471 / CAN/CSA C22.2 No. 120-M91**
- **NSF/ANSI 7 - 2009**

1.4. RESPONSIBILITY

CIAM spa declines any responsibility relevant to damages on persons, animals and/or products in case of:

- No respect of in force norms
- Installation, which is not conform to the instructions manual
- No observance of all maintenance operations, which are suggested in this manual
- No previously agreed change operations with the manufacturer
- No proper use of the refrigerated display cabinet, for which the machine has been produced.

1.5. WARNING

Anytime CIAM spa reserves the right to up-date the content of this manual and/or to modify the product in order to improve its quality and performance, without any previous notice and/or communication.

2. DISPLAY CASE DATA PLATE

2.1. DATA PLATE CONTENT

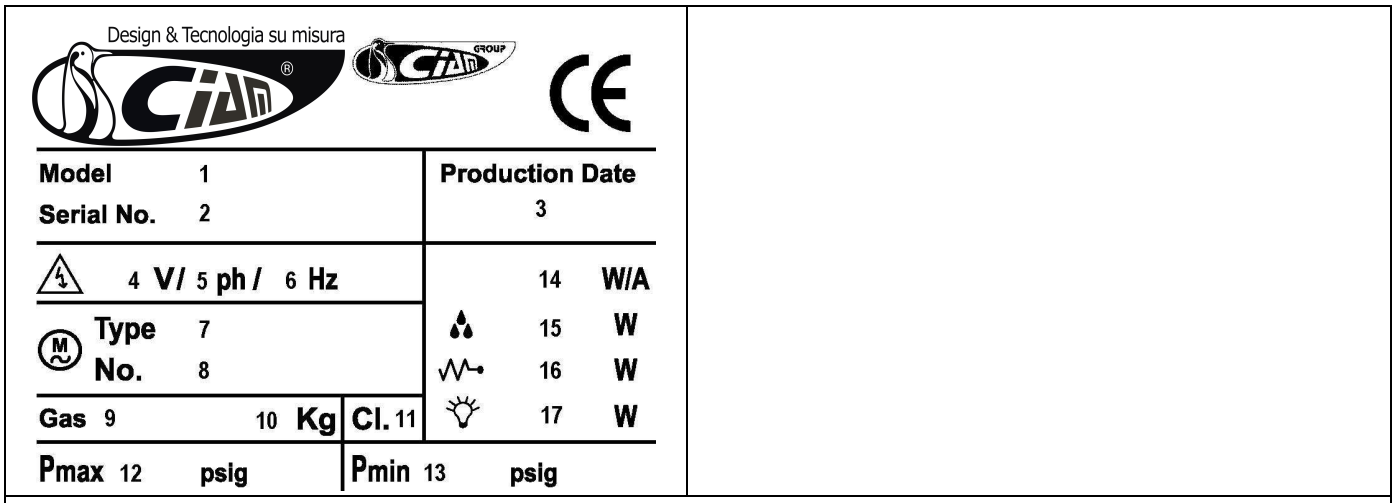

1. Commercial name of the unit
2. Identification number
3. Production date
4. Voltage
5. Phases
6. Frequency
7. Compressor type
8. Number of compressor
9. Refrigerant type
10. Refrigerant weight
11. Climatic rate (Cl.3 = +25°C/60% U.R.; Cl. 4 = +30°C/55% U.R.)
12. Test pressure – system high pressure side
13. Test pressure – system low pressure side
14. Nominal power/current absorbed during defrost
15. Max. power absorbed during defrost
16. Nominal power absorbed by heating elements (only if higher than 100W)
17. Lighting nominal power

3. TECHNICAL FEATURES

CIAO GEL			GEL 12	GEL 18	GEL 24
Load limit height	H	(mm)			
Ice cream pans	5,2 dm³ (360x165x120 mm)		12	18	24
	6,5 dm³ (250x360x80 mm)		8	12	16
Display cabinet weight		(kg)	210	280	320
Display cabinet performances	Climatic class-Environment	(°F/%R.H.)	85 / 55		
	Working temperature	(°F)	0		
Electrical supply		(V/ph/Hz)	220 / 1 / 60		
Refrigeration			Forced air circulation		
Dfrosting			Automatic, by reverse cycle		
Refrigerating gas			R 404A		
Glasses			Heated side glasses, hetaed front glass		
Standard internal compressor	Type		Hermetic single phase		
	No.		1	1	1
	Nominal power	(W)	600	725	2 x 560
Power/current of display cabinet		(W/A)	1800/10,0	2.050/11,5	2.250/13,5
Closing for refrifgerated area			Sliding doors		

4. LOAD LIMITS

In the following figure are shown the load limits for the displayed product.

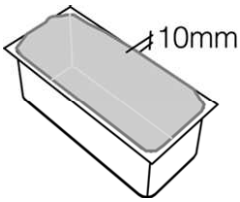

The product should be exposed in order to ensure right air flow ! So it's necessary to comply with the load before showed.
ATTENTION! The manufacturer is not liable for failures caused by improper use of equipment!

5. INSTALLATION

5.1. MACHINE HANDLING

- The ice cream display cabinet handling, from the truck to the final place, has to be made by any truck-lift, which is proper to its weight. The display cabinet shall be always balanced in order to ensure personnel integrity and machine functionality

- The cabinet can be shipped with or without wood packaging, in case wood crate will be used, will have a pallet base for an easy fork-lift handling. The pallet, however should be handle in the central position

- During the shipment, it is necessary to avoid any crash or/and shake of the display cabinet in order to not damage its frame, especially its glasses.

- Do not drag the display cabinet on the floor and do not push it on the upper glasses.

5.2 STOCK OF THE DISPLAY CABINET

- Whenever the cabinet has to be stoked, follow carefully what suggested before.
- Environmental temperature during the cabinet stock can have following range -15°C and + 55°C and humidity between 30% and 90%.
- The display cabinet has always to be protected by sunrays and raining.
- In case the display cabinet has to remain in stock quite long time before its use, keep it with its packaging in order to maintain its protection.

5.3. PACKAGING REMOVE

Before getting the display cabinet from the forwarding agent, check its conditions. In case it will be some damages, inform the driver and sign it on shipping documents. **Eventual damages relevant to the shipment and/or to the wrong stock, have not to be ascribed to the manufacturer.**

5.4. DISPLAY CABINET POSITION

The refrigerated display cabinet needs particular environmental conditions in order to offer the right performance, so that the area where it will be used has to respect following indications

- Floor has to be levelled perfectly, on the contrary keep the display cabinet on the horizontal position in order to guarantee a perfect defrosting water drain and avoid boring compressor noises.

- The display cabinet has to not be under the sun-rays in order to have its better refrigeration performance, has to remain inside the local or to be sheltered by window curtain. If what described above is not observed, it can determinate an increase of temperature of displayed product and an increasing power consume.

- The display cabinet has not to be under air currents due to open doors or windows, or under roof ventilators or under air condition outlets.
  In case will be not respected the above suggestions it can arise an increasing of temperature of the displayed product and/or an increasing ice phenomena on the evaporator and internal fans, which compromise the correct cold air circulation and product consistence

- The display cabinet has not to be placed close any heat source as heaters, ovens, etc

- The display cabinet has to have a sufficient place in order to ensure a correct custom service, to make an easy maintenance operation, to guarantee the right air flow necessary to make cold the condenser. Besides the warm air which flows out has to no have any obstacle or to invest other equipments in order to not reduce the correct functions.

5.8 – ELECTRICAL CONNECTION – REMOTE CONDENSING UNIT

In case the display cabinet has a remote condensing unit, the electric control panel is supplied separately; in case the display cabinet is without condensing unit, the machine can be supplied without external control panel. However the electrical connection has to be made in the point indicating in the pic. 5.3.
In this point 5 connecting terminal are not fixed; they are numbered and represent:

1-2 Electrical supply
3-4 Compressor switch
5-6 Defrosting switch
Ground connecting terminal

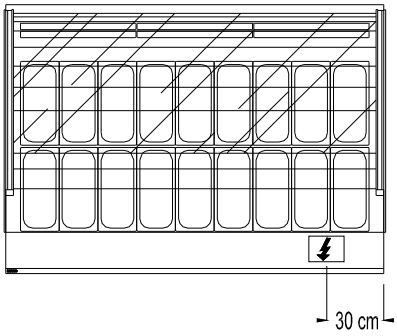

pic.5.3

5.9. IDRAULIC CONNECTION

- In case the display cabinet has an internal condensing unit by air, it is not necessary any water system connection.
- In case the display cabinet has a dipper well, it is necessary make the connection of its water outlet with the main water drain outlet; besides it is necessary set a load water tube to the dipper well, to the operator side, to the right or to the left, according to customer's choice.
- In case the display cabinet has condensing unit working fully or partially by water, it is necessary to connect the load water tube (this is the tube with thermo insulation) with the unload water tube(this is the tube without thermo insulation), of condenser working by water, to the water line

5.10. IDRAULIC CONNECTION - REMOTE CONDENSING UNIT

- In the case then display cabinet has a remote condensing unit, it is necessary make the connection of defrosting water outlet with the main water drain outlet. At the base of cabinet you can find a female pipe-fitting with a rapid receptacle for a tube Ø 32 mm

6. ROUTINE MAINTENANCE AND PERIODIC CHECKS

- **These kinds of operations are at client's expenses.**
- In case some malfunctioning of the unit are observed, please make sure this is not due to non-maintenance reasons, before you apply to qualified assistance.
- The accurate and periodic cleaning of the unit will reduce the risk of damages to the unit itself and to the products stored within.
- See following tab for reference.

ATTENTION ! Before starting any maintenance and cleaning operation make sure you operate on the main switch in order to deactivate tension **(pic. 6)**

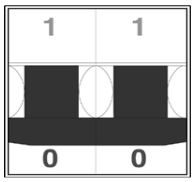

(pic 6)

MAINTENANCE OPERATIONS AND THIR FREQUENCY. A SUMMARY TAB.

OPERATION	DESCRIPTION	FREQUENCY
Surfaces' cleaning	• Wash exclusively with warm water and neutral soup; rinse abundantly and wipe off with a soft cloth. • Do not use abrasive products	weekly
Plastic surfaces' cleaning	• Wash exclusively with warm water and neutral soup; rinse abundantly and wipe off with a soft cloth. • Do not use alcohol, acetone and any solvent that might spoil the look and structure of the material.	weekly
Glass surfaces' cleaning	• Use only specific products for glass cleaning • Using water alone might lead to calcareous deposits on the glass surfaces	daily
Wooden surfaces' cleaning	• Use exclusively a wet cloth.	weekly
Additional defrost	• Under particular conditions of temperature and humidity, the frost that normally forms on the evaporator and fans might increase in volume, so leading to a faulty functioning the unit. • If these conditions should last, the assistance of a qualified technician shall be needed. Waiting for this service, it is suggested to operate one or more defrost cycles (despite the damages this might cause to the stored product)	Waiting for qualified assistance
Periodic defrost	• In order to obtain the best performance from the cooling system, we suggest to operate an extended defrost cycle. • Before you do that, please remove displayed products from inside the cabinet; always operate an additional defrost cycle in order to remove from the evaporator the largest possible amount of frost or ice. Turn the main switch off for 5 hours (min.) • Before re-starting the unit, make sure that frost has totally melted and wipe carefully.	max. 15 DAYS
ATTENTION! DO NOT CLEAN THE UNIT WITH WATER JETS		

7. EXTRAORDINARY MAINTENANCE

This type of operation has to be made by qualified technician only.

ATTENTION! Before operating any maintenance, make sure the tension is deactivated. (pic.11).

- Lamps' replacement: qualified technician needed.
- Air condenser cleaning: qualified technician needed. When the fan is switched off you can clean the condenser with a compressed air jet. Never use metallic brushes. Use protection gloves **(pic.7).**

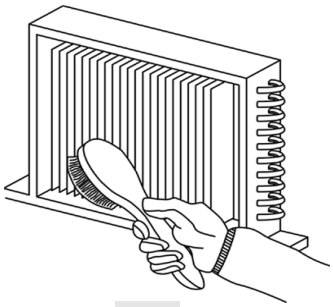

(Pic.7.)

8. DEFECTS AND REMEDIES

DEFECT	PROBABLE CAUSES	POSSIBLE REMEDIES
The unit does not work	Automatic switch released due to absorption overload	Re-start the automatic switch
	Main switch off	Turn the main switch on
	Refrigeration switch off	Turn the refrigeration switch on
	Electrical black-out in the building	If the black-out does not end in a reasonable time frame, it become necessary to move the displayed product in another refrigerator
The temperature inside the display area does not get enough cold	The evaporator(s) is blocked by ice forming	Operate a complete defrost cycle after having displaced the products in another refrigerator.Do not put the product back in the cabinet until the real defect has been identified
	The internal fans are damaged or not working	Replace the damaged fans. If the fans are not damaged, an electrical defect must be identified. If the fans are replaced, the blades' inclination have to be maintained unchanged
	Excess of internal ventilation	Replace the fans and make sure that blades' inclination is kept unchanged
	The pre-set temperature of the digital control panel is wrong	Set the correct temperature
	The digital control is not working	Replace the slave module or the temperature sensor, after you made clear which one is faulty
	The display area is crossed by draught or exposed to direct/reflected sunbeams	Eliminate draughts and try to avoid sunbeams interference in any way
	Air condenser is clogged by dust or dirt	Clean the condenser with accuracy
	The cooling air flow of the condenser is not sufficient	Remove everything that might obstacle the air flow through the condenser
	Refrigerant gas not sufficient inside the cooling system	Find and remove the leak inside the system. Refill the system with the refrigerant
	The cooling water flow of the water condenser is not sufficient	Check that water supply is operating. In case it is, just regulate (or replace) the regulation valve
The product gets too hard next to air outlet and too soft next to air intake	Front evaporator blocked by frost	Verify the efficiency of the gasket seal (relatively to the glass superstructure). Verify that the display area is not crossed by draughts. Verify that backsliders (or night blind) are always closed, peak hours excepted. Verify that internal ventilation is sufficient and that the product does not exceed 10mm above the pans level. Act accordingly
	Front evaporator blocked by ice	All the a.m. checks are required Verify, in addition, the defrost cycle efficiency
	Back evaporator blocked by ice	Verify that the refrigerating and electric systems of the unit are working properly
	Internal fans are not efficient	Restore the efficiency of the fans by replacing the damaged ones
	The basket seal of the glass superstructure is not sufficient	Verify the seriousness of the defect and make sure the draughts are minimized
Some of the products tend to soften, while some other keep the right consistence	The temperature inside the display area is not fit for the products that get too soft	Since the storage temperature cannot be appropriate for any gelato product, based on different flavours and compositions, it is suggested to display only similar products together
The compressor does not start or it does not hold operating	There is no electrical supply	Verify there is no black-out in progress. Turn all the power switches on.
	The supply tension is too low	Verify that nominal tension at connecting clamps is 220V; a tension between 198V and 242V will be acceptable. If the tension does not reach 198V, the compressor might have problems in starting. Verify the efficiency of electric installation including the connecting clamps to the compressor
	The pre-set temperature on the thermostat is too high	If the preset temperature is higher than in the display area, the compressor is not going to work. Change the settings if you verify that the preset temperature is not enough low
	The intervention of the max pressure valve (where present)	Identify the probable cause among the following: The air condenser is blocked - The cooling fan of the air condenser is not working - The room temperature is too high - Lack of cooling water in the water condenser - The pressure valve is broken - Remove the cause

DEFECT	PROBABLE CAUSES	POSSIBLE REMEDIES
The compressor works constantly or for too long periods	The temperature inside the room is too high	The compressor can only work constantly if there is no chance of decreasing room temperature (for instance with a.c. system)
	The temperature of the compressors' room is too high (remote comp.)	See above
	The air condenser is blocked	Clean the condenser carefully
	Cooling air flow of the water condenser is not sufficient	Check the efficiency of the regulation valve and make sure that taps are turned on
	Lack of refrigerant	Identify the eventual leak and refill with refrigerant
	Internal ventilation is not sufficient	Restore a proper ventilation by replacing the faulty fans or by removing the eventual obstacle
	Evaporators are extremely clogged	Operate a complete defrost cycle
	The temperature set on the thermostat is too low	Adjust temperature settings
Temperature is not displayed on the digital panel	Flat battery	Replace battery
	Sensor does not work properly	Replace digital thermostat
	Faulty electronics	Replace digital thermostat
Defrost water missing	Water drain pipes are blocked	Remove the obstacle
	Defrost cycle is not efficient	Verify the efficiency of control panel (slave module, sensor, solenoid valve..) and the position of the end cycle sensor
Lighting is not working	The switch is off	Turn the switch on
	The neon lamp is not properly fitted in its case	Ad just the lamp by rolling it
	Exhausted lamp	Replace the lamp
	Ballasts or starter are not efficient	Replace faulty components
The unit is too noisy	Vibrations of internal plates	Tighten all the fixing screws
	Internal fans are not fixed well	See above
	Fans' blades are not fixed well	Replace faulty fans. If there is friction between the blades and some ice formation, then act on defrost cycle settings
	Pipes are in contact with other parts of equipment	Avoid any contact between pipes and other parts; a constant rubbing might wear the pipes out and give way to refrigerant leaking
	The unit is not well levelled	Adjust the levelling
Condensation water forming on the glasses	Transformer is not working	Check that the transformer is correctly supplied - Verify the correct functioning of the transformer fuse - Replace the transformer
	Heating circuit interrupted	Replace the glasses

REFRIGERATION AND ELECTRICAL SYSTEM CABLE CONNECTION GUIDE

AGD	DIGITAL FLAVOURS DISPLAY FEEDER
AEL	ELECTRONIC BALLAST
AP	SERVICE VALVE
CA	SUPPLY CABLE
CAR	AIR CONDENSER
CE	ELECTRONIC CONTROL
CN	MULTIPOLAR CONNECTOR
CO	COMPRESSOR
D	DIOD
DEV	SHUNT
DR	REMOTE DISPLAY
EM	PHOTOCELL EMITTER
EV	EVAPORATOR
F	FUSE
FD	FILTER DRIER
FLU	WATER FLOW SWITCH
FR	COMPRESSOR THERMAL PROTECTION
HL	COMPRESSOR ALARM LIGHT
I	GENERIC SWITCH
IEC	WATER EVAPORATION BIN SWITCH
IGD	DIGITAL FLAVOURS DISPLAY
II	LIGHTING SWITCH
IL	SIGHT GLASS
IMC	WARM SHELF SWITCH
INV	INVERTER
IR	REFRIGERATION SWITCH
IRP	LIGHT REFRIGERATION SWITCH
IV	INTERNAL FAN SWITCH
KM	CONTACTOR
LF	FRONT LIGHTING
LI	INTERNAL UPPER LIGHTING
LIA	FRONT LIGHTING
LIG	FLAVOURS DISPLAY LIGHTING
LIP	REAR LIGHTING
MDIG	DIGITAL MODULE FOR FLAVOURS DISPLAY
MM	SPINNING SHELVES ELECTRIC MOTOR
MUC	CONDENSING UNIT ELECTRIC CONNECTIONS
PA	HIGH PRESSURE CONTROL
PD	HIGH-LOW PRESSURE CONTROL
PO	WATER PUMP
QE	EXTERNAL ELECTRIC PANEL
QF	MAGNETIC-THERMIC SWITCH
R	LIGHTING BALLAST
RADD	RECTIFIER
RE	GENERIC RELAY
REL	ELECTRONIC BALLAST
REP	ELECTRONIC CONTROL TEMPERATURE REPEATER
RES1	COLD AIR DISCHARGE HEATING ELEMENT
RES2	FRONT PROFILE HEATING ELEMENT
RES3	RIGHT/LEFT GLASS HEATING ELEMENT
RES4	FRONT GLASS HEATING ELEMENT
RES5	DEFROST HEATING ELEMENT
RES6	WATER EVAPORATION HATING ELEMENT
RES7	TOP LIGHTING FIXTURE HEATING ELEMENT
RES8	LATERAL GLASS SUPPORT HEATING ELEMENT
RES9	FRONT BAND HEATING ELEMENT
RES10	COUPLING BAND HEATING ELEMENT
RES11	SERVICE TOP HEATING ELEMENT
RES12	UPPER BAND/DOOR FRAME HEATING ELEMENT
RES13	HOT DRY/BAIN MARIE DISPLAY HEATING ELEMENT
RES14	ANTI-FOG SUCTION AIR BAND HEATING ELEMENT
RES15	WARM SHELF HEATING ELEMENT
RES16	SIDE BANDS/ FRONT GLASS HINGE HEATING ELEMENT
RES17	DEHUMIDIFICATION HEATING ELEMENT
RES18	DEFROSTING WATER DRAIN HEATING ELEMENT
RES19	RING FRAME HEATING ELEMENT
RES20	SIDE BAND HEATING ELEMENT
RES21	SUCTION AIR GLASS HEATING ELEMENT
RES22	OUTLET AIR HEATING ELEMENT
RES23	REAR GLASS HEATING ELEMENT
RES24	INTERNAL GLASS HEATING ELEMENT
RES25	FRONT GLASS UPPER FRAME HEATING ELEMENT
RES26	FRONT GLASS LATERAL/LOWER FRAME HEATING ELEMENT
RES27	FRONT GLASS LATERAL FRAME HEATING ELEMENT
RES28	FRONT GLASS LOWER FRAME HEATING ELEMENT
RES29	FRONT GLASSES COUPLING PROFILE HEATING ELEMENT
RES30	DOORS FRAME MIDDLE POST HEATING ELEMENT
RES31	GLASSES PERIMETRAL FRAME HEATING ELEMENT
RES32	HEATED DOORS HEATING ELEMENTS
RES33	WATER DRAIN HEATING ELEMENT
RES34	DOORS FRAME HEATING ELEMENT
RES35	COMPRESSOR CRANKCASE HEATING ELEMENT
RES36	FRONT GLASS FRAME HEATING ELEMENT
RES37	CABINET FRAME HEATING ELEMENT
RES38	HOT COMPARTMENT HEATING ELEMENT
REV	CONDENSER FAN SPEED CONTROL
REVC	CONDENSER FAN RELAY
RI	REFRIGERANT TAP
RIC	COMPRESSOR DELAYER
RICV	PHOTOCELL RECEIVER
RIS	RESERVE , ANTI-FOG HEATER ELEMENT
RL	LIQUID RECEIVER
RLA	WATER LEVEL ELECTRONIC CONTROL
RO	OIL HEATER ELEMENT
SAA	ABSENCE OF WATER LIGHT
SC	CONDENSER PROBE
SD	TERMINAL BOX
SDC	COMPRESSOR TERMINAL BOX
SE	PROXIMITY SENSOR
SEC	MAIN SWITCH
SFV	TANK BOTTOM HEATING COIL
SIDG	FLAVOURS DISPLAY DIGITAL SYSTEM
SL	LIQUID SEPARATOR
SLA	WATER LEVER PROBE
SPC	COMPRESSOR LIGHT
SPMC	WARM SHELF LIGHT
SPR	ELECTRIC SUPPLY LIGHT
SPS	DEFROSTING LIGHT
SS	DEFROSTING PROBE
ST	TEMPERATURE PROBE
STR	LIGHTING STARTER
SU	HUMIDITY PROBE
T	TEMPERATURE CONTROL
TI	WINTER THERMOSTAT
TC	CAPILLARY TUBE
TE	TIMER
TER	THERMOMETER
TF	FUSIBLE PLUG
TMC	WARM SHELF THERMOSTAT
TP	LIGHTING FIXTURES REGRIGERATOR THERMOSTAT
TRA	TRANSFORMER
TRC	ELECTRONIC CONTROL TRANSFORMER
TREV	WATER EVAPORATION HEATER ELEMENT THERMOSTAT
TS	SECURITY THERMOSTAT
TVC	CONDENSER FAN THERMOSTAT
V	COMPRESSOR FAN / GENERAL USE
VC	CONDENSER FAN
VEC	WATER EVAPORATION BIN
VES	EXPANSION VALVE
VI	INTERNAL FAN
VPA	CONDENSING PRESSURE CONTROL WATER VALVE
VR	CHECK VALVE
VRA	SUCTION PRESSURE REGULATION VALVE
VRE	EVAPOTATING PRESSURE REGUTATION VALVE
VS	GENERAL USE SOLENOID VALVE
VSA	SOLENOID WATER VALVE
VSAB	BY-PASS SOLENOID WATER VALVE
VSIC	REVERSING CYCLE SOLENOID VALVE
VSL	LIQUID SOLENOID VALVE
VSS	DEFROSTING SOLENOID VALVE
VT	POWER REGULATOR
VV	GLASS FAN
X1	CABINET CONNECTIONS
X2	EXTERNAL ELECTRIC PANEL CONNECTIONS
X3	CONDENSING UNIT CONNECTIONS

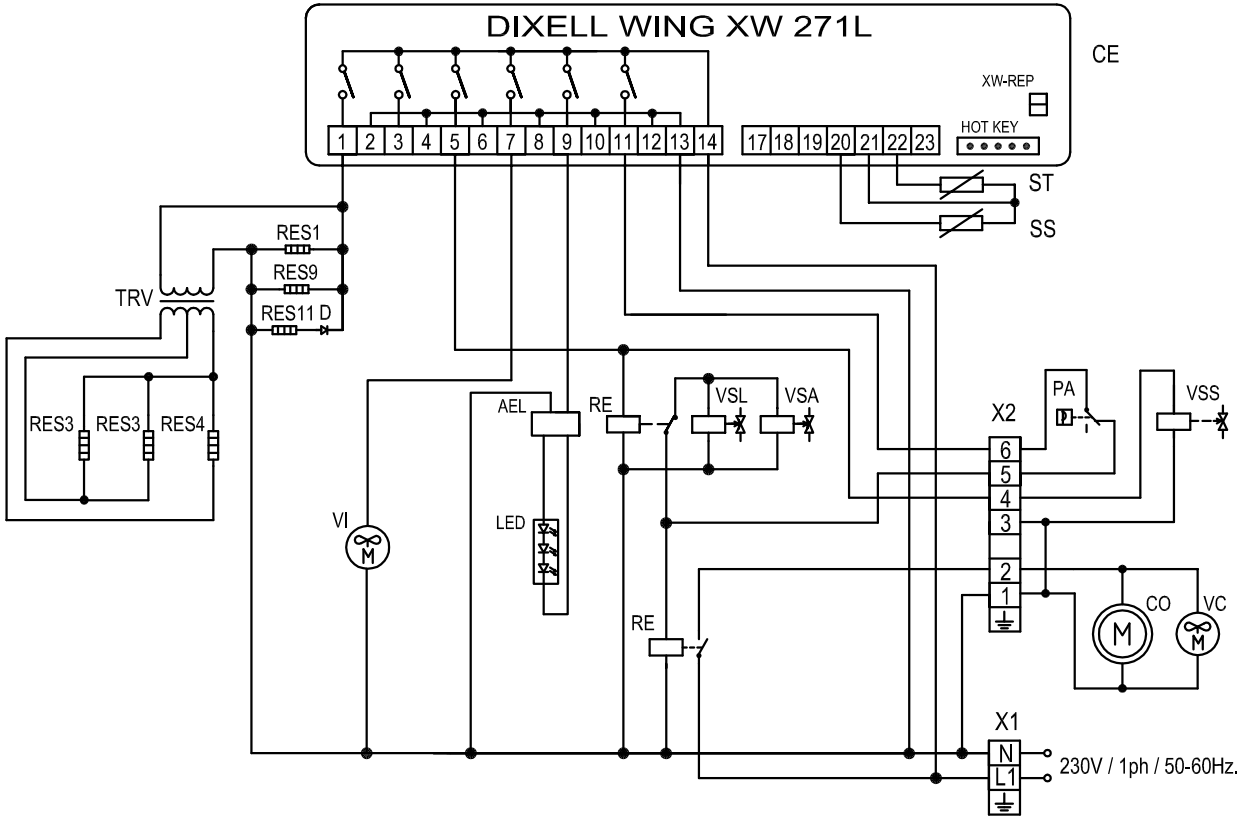

NOTE : La valvola solenoide dell'acqua VSA è presente solo nelle unità condensatrici miste aria-acqua.
Nel caso di motore esterno monofase il sezionatore magneto-termico/ differenziale è a carico del cliente/installatore e si raccomanda di installarlo nelle immediate vicinanze del motore per rendere sicure le operazioni di manutenzione

NOTE : The water solenoid valve VSA is only for mixed water-air condensation
In case of single-phase outside motor the differential/thermal switch must be placed by the customer
It is recommended to install this switch in the immediate vicinity of the condensing unit to make sure maintenance

nati per il freddo

Design & Tecnologia su misura

Viale del Pini,9
06081 Petrignano d'Assisi
Perugia - Italy
Phone:075 80161 Fax 075 8016215
www.ciamgroup.it - mail:
tecnico@ciamgroup.it

Rugosità - Ra 3,2

QUOTE SENZA INDICAZIONE DI TOLLERANZA - Grado di precisione medio UNI 5307

0÷6	6÷30	30÷120	120÷315	315÷1000	1000÷ 2000	3÷6	6÷30	30÷120	oltre 120	Smussi e Raggi
±0,06	±0,1	±0,15	±0,2	±0,3	±0,5	±1°	e 30'	e 20'	e 10'	0,3÷0,8

TRATT. SUPERFICIALE
Togliere Bavature
Toll. generali vedi tabella

REV.	DATA	DESCRIZIONE	VERIFICA	APPROVAZIONE
0	19/01/12	EMISSIONE		

DENOMINAZIONE: Schema elettrico funzionale / Electrical wiring Diagram
CIAO GEL 12-18 .
(U.C. monofase interna, sbrinam. ad inversione di ciclo - Condensing unit built in, reverse cycle defrost)

SCALA

MATERIALE | Q.tà
FINITURA | Peso (Kg)

DESIGNER: Alessio Sforna
DATA: 19/01/2012

P / N: SEF 400-12

FOGLIO

A termini di legge ci riserviamo la proprietà di questo disegno con divieto di riprodurlo o renderlo noto a terzi senza nostra approvazione

Certified Quality System ISO 9001:2000

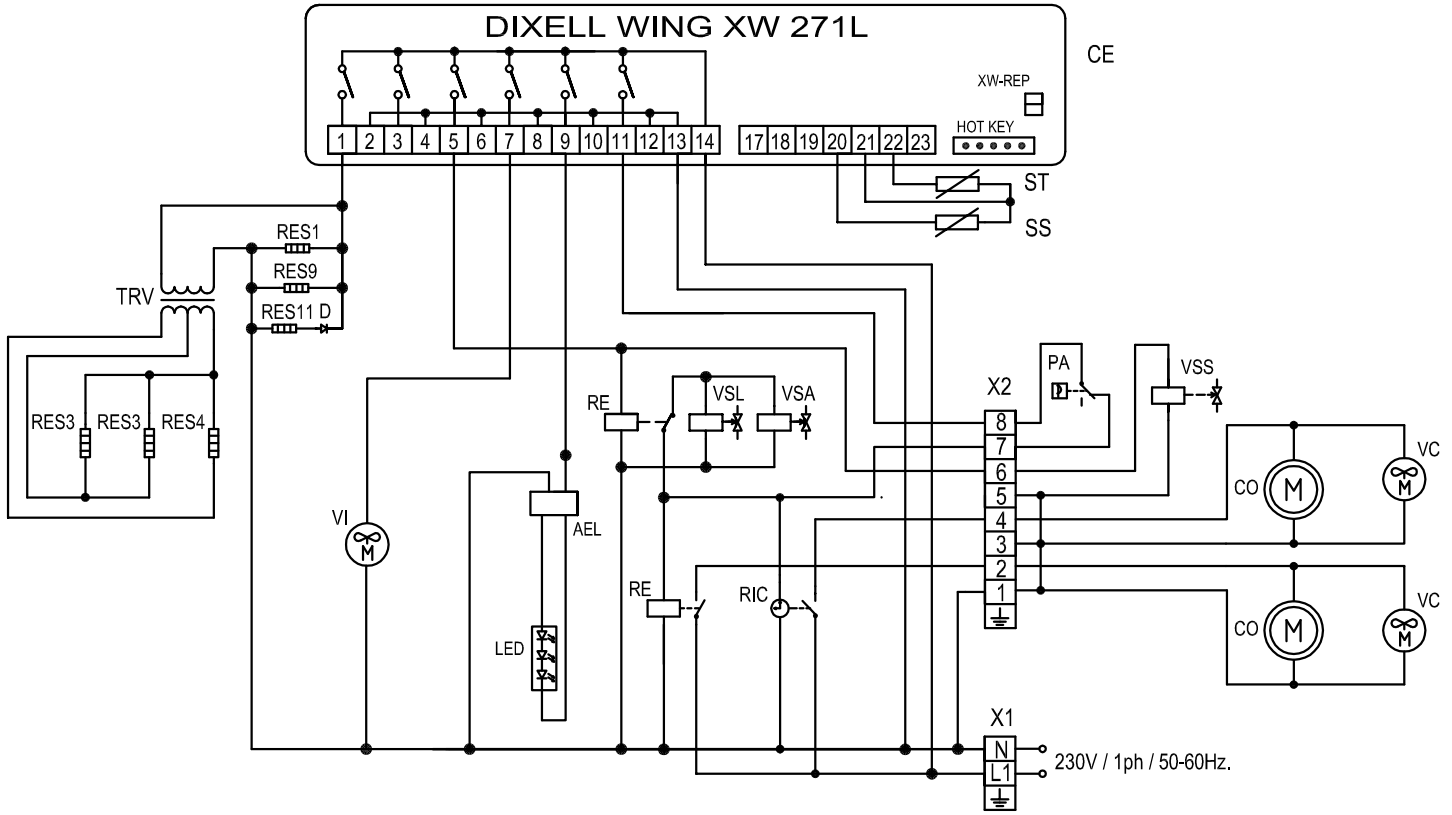

NOTE : La valvola solenoide dell'acqua VSA è presente solo nelle unità condensatrici miste aria-acqua.
Nel caso di motore esterno monofase il sezionatore magneto-termico/ differenziale è a carico del cliente/installatore e si raccomanda di installarlo nelle immediate vicinanze del motore per rendere sicure le operazioni di manutenzione

NOTE : The water solenoid valve VSA is only for mixed water-air condensation
In case of single-phase outside motor the differential/thermal switch must be placed by the customer
It is recommended to install this switch in the immediate vicinity of the condensing unit to make sure maintenance

Design & Tecnologia su misura

Viale del Pini,9
06081 Petrignano d'Assisi
Perugia - Italy
Phone:075 80161 Fax 075 8016215
www.ciamgroup.it - mail:
tecnico@ciamgroup.it

Rugosità - Ra 3,2

QUOTE SENZA INDICAZIONE DI TOLLERANZA - Grado di precisione medio UNI 5307

0÷6	6÷30	30÷120	120÷315	315÷1000	1000÷ 2000	3÷6	6÷30	30÷120	oltre 120	Smussi e Raggi
±0,06	±0,1	±0,15	±0,2	±0,3	±0,5	±1°	e 30'	e 20'	e 10'	0,3÷0,8

TRATT. SUPERFICIALE
Togliere Bavature
Toll. generali vedi tabella

REV.	DATA	DESCRIZIONE	VERIFICA	APPROVAZIONE
0	24/03/05	EMISSIONE		

DENOMINAZIONE: Schema elettrico funzionale / Electrical wiring Diagram
CIAO GEL 24 .
(U.C. monofase interna, sbrinam. ad inversione di ciclo - Condensing unit built in, reverse cycle defrost)

SCALA

MATERIALE | Q.tà
FINITURA | Peso (Kg)

DESIGNER: Alessio Sforna
DATA: 19/01/2012

P / N: SEF 401-12

FOGLIO

A termini di legge ci riserviamo la proprietà di questo disegno con divieto di riprodurlo o renderlo noto a terzi senza nostra approvazione

Certified Quality System ISO 9001:2000

WING

XW270L - XW271L

1. GENERAL WARNING

1.1 PLEASE READ BEFORE USING THIS MANUAL

- This manual is part of the product and should be kept near the instrument for easy and quick reference.
- The instrument shall not be used for purposes different from those described hereunder. It cannot be used as a safety device.
- Check the application limits before proceeding.

1.2 SAFETY PRECAUTIONS

- Check the supply voltage is correct before connecting the instrument.
- Do not expose to water or moisture: use the controller only within the operating limits avoiding sudden temperature changes with high atmospheric humidity to prevent formation of condensation
- Warning: disconnect all electrical connections before any kind of maintenance.
- Fit the probe where it is not accessible by the End User. The instrument must not be opened.
- In case of failure or faulty operation send the instrument back to the distributor or to "Dixell s.r.l." (see address) with a detailed description of the fault.
- Consider the maximum current which can be applied to each relay (see Technical Data).
- Ensure that the wires for probes, loads and the power supply are separated and far enough from each other, without crossing or intertwining.
- In case of applications in industrial environments, the use of mains filters (our mod. FT1) in parallel with inductive loads could be useful.

2. GENERAL DESCRIPTION

Models **XW270L** and **XW271L**, **38x185** mm format, are microprocessor based controllers suitable for applications on medium or low temperature refrigerating units. They are provided with six relay outputs to control compressor, defrost - which can be either electrical or hot gas - the evaporator fans, the lights, the alarm and an auxiliary output. In **XW271L** the auxiliary output is configured as anti-condensing heater.
They are also provided with three NTC probe inputs, one for temperature control, one to control the defrost end temperature of the evaporator and the third, optional, for the display. There are two digital inputs (free contact) for the door switch and configurable by parameter.
The standard TTL output allows the user to connect, by means of a TTL/RS485 external module, a **ModBUS-RTU** compatible monitoring system and to programme the parameter list with the **"Hot Key".**
An optional output for remote display **"XW-REP"** is available.

3. CONTROLLING LOADS

3.1 THE COMPRESSOR

The regulation is performed according to the temperature measured by the thermostat probe with a positive differential from the set point: if the temperature increases and reaches set point plus differential the compressor is started and then turned off when the temperature reaches the set point value again.
In case of fault in the thermostat probe the start and stop of the compressor are timed through parameters "**COn**" and "**COF**".

3.2 FAST FREEZING

When defrost is not in progress, it can be activated the keypad by holding the ▲ key pressed for about 3 seconds. The compressor operates in continuous mode for the time set through the "**CCt**" parameter. The cycle can be terminated before the end of the set time using the same activation key, ▲ for about 3 seconds.

3.3 DEFROST

Three defrost modes are available through the "**tdF**" parameter: defrost with electrical heater, hot gas or thermostatic defrost. The defrost interval is control by means of parameter "**EdF**": (EdF=in) the defrost is made every "**IdF**" time, (EdF=Sd) the interval "IdF" is calculate through Smart Defrost algorithm (only when the compressor is ON and the evaporator temperature is bigger than "SdF" parameter).
At the end of defrost the drip time is controlled through the "**Fdt**" parameter.

3.4 CONTROL OF EVAPORATOR FANS

The fan control mode is selected by means of the "**FnC**" parameter:
FnC=C-n fans will switch ON and OFF with the compressor and **not run** during defrost:;
FnC=C-y fans will run continuously, but not during defrost
After defrost, there is a timed fan delay allowing for drip time, set by means of the "Fnd" parameter.
FnC=O-n fans will switch ON and OFF with the compressor and **run** during defrost;
FnC=O-y fans will run continuously also during defrost

An additional parameter "FSt" provides the setting of temperature, detected by the evaporator probe, above which the fans are always OFF. This can be used to make sure circulation of air only if his temperature is lower than set in "FSt".

3.5 AUXILIARY OUTPUT

The auxiliary output is switch ON and OFF by means of the corresponding button on the keyboard.
The auxiliary output of the **XW271L** model controls the anti-condensing heater and it is automatically activated if the room temperature is lower than the **"SAA"** parameter.

4. KEYBOARD

To display and modify target set point; in programming mode it selects a parameter or confirm an operation.
By holding it pressed for 3s when max or min temperature is displayed it will be erased.

To see the max. stored temperature; in programming mode it browses the parameter codes or increases the displayed value. By holding it pressed for 3s the fast freezing cycle is started.

To see the min stored temperature; in programming mode it browses the parameter codes or decreases the displayed value.

By holding it pressed for 3s the defrost is started.

Switch ON and OFF the cold room light.

By holding it pressed for 3s Energy Saving function is started or stopped.

For XW270L model. Switch ON and OFF the auxiliary output.

For XW271L model. Switch ON and OFF the anti-condensing heater output.

Switch ON and OFF the instrument.

KEY COMBINATIONS

To lock and unlock the keyboard.

To enter the programming mode.

To exit the programming mode.

4.1 USE OF LEDS

Each LED function is described in the following table.

LED	MODE	Function
	ON	The compressor is running
	FLASHING	- Programming Phase (flashing with LED) - Anti-short cycle delay enabled
	ON	The fan is running
	FLASHING	Programming Phase (flashing with LED)
	ON	The defrost is enabled
	FLASHING	Drip time in progress
	ON	The Fast Freezing cycle is enabled
	ON	- ALARM signal - In "Pr2" indicates that the parameter is also present in "Pr1"
	ON	(Present only in 'XW271L) The Anti-condensing heater relay (Aux) is ON.

Function of the LEDs placed on the left top side of buttons:

BUTTON	MODE	FUNCTION
SET	FLASHING	The Set point is displayed and it can be modified
SET	FAST FLASHING	The Energy Saving is enabled
DEFROST	ON	The Manual Defrost is activated
ENERGY SAVING	ON	The Energy Saving is enabled
LIGHT	ON	The Light is ON
AUX	ON	The Auxiliary output is ON (XW270L)
HEATER	ON	The Anti-condensing heater is ON (XW271L)
ON/OFF	ON	The instrument is OFF

4.2 HOW TO SEE THE MIN TEMPERATURE

1. Press and release the ▼ key.
2. The "Lo" message will be displayed followed by the minimum temperature recorded.
3. By pressing the ▼ key or waiting for 5s the normal display will be restored.

4.3 HOW TO SEE THE MAX TEMPERATURE

1. Press and release the ▲ key.
2. The "Hi" message will be displayed followed by the maximum temperature recorded.
3. By pressing the ▲ key or waiting for 5s the normal display will be restored.

4.4 HOW TO RESET THE MAX AND MIN TEMPERATURE RECORDED

To reset the stored temperature, when max or min temperature is displayed :
1. Press SET key until "rST" label starts blinking.

N.B. After the installation RESET the temperature stored .

HOW TO SEE AND MODIFY THE SET POINT

1. Push and immediately release the **SET** key: the display will show the Set point value;
2. The SET LED start blinking;
3. To change the Set value push the ▲ or ▼ arrows within 10s.
4. To memorise the new set point value push the **SET** key again or wait 10s.

TO START A MANUAL DEFROST

1. Push the **DEF** key for more than 2 seconds and a manual defrost will start.

TO ENTER IN PARAMETERS LIST "PR1"

To enter the parameter list "Pr1" (user accessible parameters) operate as follows:

1. Enter the Programming mode by pressing the Set and DOWN key for few seconds (and start blinking).
2. The instrument will show the first parameter present in "Pr1"

TO ENTER IN PARAMETERS LIST "PR2"

To access parameters in "**Pr2**":

1. Enter the "Pr1" level.
2. Select "Pr2" parameter and press the "**SET**" key.
3. The "PAS" flashing message is displayed, shortly followed by "0 - -" with a flashing zero.
4. Use ▲ or ▼ to input the security code in the flashing digit; confirm the figure by pressing "**SET**". The security code is "321".
5. If the security code is correct the access to "Pr2" is enabled by pressing "**SET**" on the last digit.

Another possibility is the following: after switching ON the instrument the user can push Set and DOWN keys within 30 seconds.

NOTE: each parameter in "Pr2" can be removed or put into "Pr1" (user level) by pressing **"SET"** + ▼. When a parameter is present in "Pr1" LED ((!)) is on.

HOW TO CHANGE THE PARAMETER VALUE

1. Enter the Programming mode.
2. Select the required parameter with ▲ or ▼.
3. Press the "**SET**" key to display its value (and LED starts blinking).
4. Use ▲ or ▼ to change its value.
5. Press "**SET**" to store the new value and move to the following parameter.

To exit: Press **SET + UP** or wait 15s without pressing a key.
NOTE: the new programming is stored even when the procedure is exited by waiting the time-out.

HOW TO LOCK THE KEYBOARD

1. Keep the ▲ and ▼ keys pressed together for more than 3 s the ▲ and ▼ keys.
2. The "POF" message will be displayed and the keyboard is locked. At this point it is only possible the viewing of the set point or the MAX o Min temperature stored and to switch ON and OFF the light, the auxiliary output and the instrument.

TO UNLOCK THE KEYBOARD

Keep the ▲ and ▼ keys pressed together for more than 3s.

ON/OFF FUNCTION

By pushing the **ON/OFF** key, the instrument shows "OFF" for 5 sec. and the ON/OFF LED is switched ON.
During the OFF status, all the relays are switched OFF and the regulations are stopped; if a monitoring system is connected, it does not record the instrument data and alarms.
N.B. During the OFF status the Light and AUX buttons are active.

TO SEE THE PROBE VALUES

1. Enter in "**Pr2**" level.
2. Select "**Prd**" parameter with ▲ or ▼.
3. Press the "**SET**" key to display "**Pb1"** label alternate with Pb1 value.
4. Use ▲ and ▼ keys to display the other probe values.
5. Press "**SET**" to move to the following parameter.

PARAMETER LIST

REGULATION

Hy **Differential:** (0,1÷25,5°C; 1÷45°F): Intervention differential for set point, always positive. Compressor Cut IN is Set Point Plus Differential (Hy). Compressor Cut OUT is when the temperature reaches the set point.
LS **Minimum set point limit:** (-50,0°C**+**SET; -58°F÷SET) Sets the minimum acceptable value for the set point.
US **Maximum set point limit:** (SET**+**110°C; SET÷230°F) Set the maximum acceptable value for set point.
OdS **Outputs activation delay at start up:** (0÷255 min) This function is enabled at the initial start up of the instrument and inhibits any output activation for the period of time set in the parameter. (AUX and Light can work)
AC **Anti-short cycle delay:** (0÷30 min) interval between the compressor stop and the following restart.
CCt **Thermostat override:** (0min ÷23h 50min) allows to set the length of the continuous cycle. Can be used, for instance, when the room is filled with new products.
Con **Compressor ON time with faulty probe:** (0÷255 min) time during which the compressor is active in case of faulty thermostat probe. With COn=0 compressor is always OFF.
COF **Compressor OFF time with faulty probe:** (0÷255 min) time during which the compressor is off in case of faulty thermostat probe. With COF=0 compressor is always active.

DISPLAY

CF **Temperature measurement unit:** °C = Celsius; °F = Fahrenheit . When the measurement unit is changed the SET point and the values of the regulation parameters have to be modified
rES **Resolution (for °C)**: (in = 1°C; de = 0,1°C) allows decimal point display.
de = 0,1°C
in = 1 °C
Lod **Local display :** select which probe is displayed by the instrument:
P1 = Thermostat probe
P2 = Evaporator probe
P3 = auxiliary probe
1r2 = difference between P1 and P2 (P1-P2)
Red **Remote display :** select which probe is displayed by the remote display (XW-REP)
P1 = Thermostat probe
P2 = Evaporator probe
P3 = auxiliary probe
1r2 = difference between P1 and P2 (P1-P2)

DEFROST

tdF **Defrost type:**
rE = electrical heater (Compressor OFF)
rT = thermostat defrost. During the defrost time "MdF", the heater switches On and OFF depending on the evaporator temperature and "dtE" value.
in = hot gas (Compressor and defrost relays ON)
EdF **Defrost mode:**
in = **interval mode**. The defrost starts when the time "**Idf**" is expired.
Sd = **Smartfrost mode**. The time IdF (interval between defrosts) is increased only when the compressor is running (even non consecutively) and only if the evaporator temperature is less than the value in "**SdF**" (set point for SMARTFROST).
SdF **Set point for SMARTFROST**: (-30÷30 °C/ -22÷86 °F) evaporator temperature which allows the IdF counting (interval between defrosts) in SMARTFROST mode.
dtE **Defrost termination temperature:** (-50,0÷110,0°C; -58÷230°F) (Enabled only when the evaporator probe is present) sets the temperature measured by the evaporator probe which causes the end of defrost.
IdF **Interval between defrosts:** (1÷120h) Determines the time interval between the beginning of two defrost cycles.
MdF **(Maximum) duration of defrost:** (0÷255 min) When **P2P = n**, no evaporator probe, it sets the defrost duration, when **P2P = y**, defrost end based on temperature, it sets the maximum length for defrost.
dFd **Display during defrost:**
rt = real temperature;
it = temperature reading at the defrost start;
Set = set point;
dEF = "dEF" label;
dEG = "dEG" label;
dAd **Defrost display time out:** (0÷255 min) Sets the maximum time between the end of defrost and the restarting of the real room temperature display.
Fdt **Drain down time:** (0÷60 min.) time interval between reaching defrost termination temperature and the restoring of the control's normal operation. This time allows the evaporator to eliminate water drops that might have formed due to defrost.
dPO **First defrost after start-up:**
y = Immediately;
n = after the IdF time
dAF **Defrost delay after fast freezing:** (0min÷23h 50min) after a Fast Freezing cycle, the first defrost will be delayed for this time.

FANS

FnC **Fan operating mode:**
C-n = running with the compressor, OFF during the defrost;
C-y = running with the compressor, ON during the defrost;
O-n = continuous mode, OFF during the defrost;
O-y = continuous mode, ON during the defrost;
Fnd **Fan delay after defrost:** (0÷255 min) The time interval between the defrost end and evaporator fans start.
FSt **Fan stop temperature:** (-50÷110°C; -58÷230°F) setting of temperature, detected by evaporator probe, above which the fan is always OFF.

ALARMS

ALC **Temperature alarm configuration**
rE = High and Low alarms related to Set Point
Ab = High and low alarms related to the absolute temperature.
ALU **High temperature alarm setting:**
ALC= rE, 0 **+** 50°C or 90°F
ALC= Ab, ALL ÷ 110°C or 230°F
when this temperature is reached and after the ALd delay time the HA alarm is enabled.
ALL **Low temperature alarm setting:**
ALC = rE , 0 **+** 50 °C or 90°F
ALC = Ab , - 50°C or -58°F **+** ALU
when this temperature is reached and after the ALd delay time, the LA alarm is enabled,.
AFH **Temperature alarm and fan differential:** (0,1÷25,5°C; 1÷45°F) Intervention differential for temperature alarm set point and fan regulation set point, always positive.
ALd **Temperature alarm delay:** (0÷255 min) time interval between the detection of an alarm condition and the corresponding alarm signalling.
dAO **Delay of temperature alarm at start-up:** (0min÷23h 50min) time interval between the detection of the temperature alarm condition after the instrument power on and the alarm signalling.
EdA **Alarm delay at the end of defrost:** (0÷255 min) Time interval between the detection of the temperature alarm condition at the end of defrost and the alarm signalling.
dot **Delay of temperature alarm after closing the door :** (0÷255 min) Time delay to signal the temperature alarm condition after closing the door.
doA **Open door alarm delay:**(0÷255 min) delay between the detection of the open door condition and its alarm signalling: the flashing message "**dA**" is displayed.
tbA **Buzzer and alarm relay silencing:** by pushing one of the keypad buttons.
n= Only the Buzzer is silenced;
y= Buzzer and relay are silenced.
nPS **Pressure switch number:** (0 ÷15) Number of activation of the pressure switch, during the "**did**" interval, before signalling the alarm event (I2F= PAL).

PROBE INPUTS

Ot **Thermostat probe calibration:** (-12.0**+**12.0°C/ -21**+**21°F) allows to adjust possible offset of the thermostat probe.
OE **Evaporator probe calibration:** (-12.0**+**12.0°C/ -21**+**21°F) allows to adjust possible offsets of the evaporator probe.

O3 **Auxiliary probe calibration:** (-12.0÷12.0°C/ -21÷21°F) allows to adjust possible offsets of the evaporator probe.
P2P **Evaporator probe presence:**
n= not present: the defrost stops only by time; **y=** present: the defrost stops by temperature and time.
P3P **Auxiliary probe presence: n**= not present; **y=** present.
HES **Temperature increase during the Energy Saving cycle :** (-30,0°C ÷ 30,0°C / -22÷86°F) sets the increasing value of the set point during the Energy Saving cycle.

DIGITAL INPUTS

odc **Compressor and fan status when open door:**
no = normal;
Fan = Fan OFF;
CPr = Compressor OFF;
F_C = Compressor and fan OFF.
I1P **Door switch input polarity:**
CL : the digital input is activated by closing the contact;
OP : the digital input is activated by opening the contact.
I2P **Configurable digital input polarity:**
CL : the digital input is activated by closing the contact;
OP : the digital input is activated by opening the contact
I2F **Digital input operating mode:** configure the digital input function:
EAL = generic alarm;
bAL = serious alarm mode;
PAL = Pressure switch;
dFr = Start defrost;
AUS = Relay AUX actuation;
Es = Energy Saving;
onF = remote On/OFF.
did **Time interval/delay for digital input alarm:**(0÷255 min.) Time interval to calculate the number of the pressure switch activation when I2F=PAL. If I2F=EAL or bAL (external alarms), "did" parameter defines the time delay between the detection and the successive signalling of the alarm.
SAA **Set Point for anti-condensing heater:** (-50,0÷110,0°C; -58÷230°F) defines the room temperature setpoint to switch on the anti-condensing heater.

OTHER

Adr **RS485 serial address** (1÷247)**:** Identifies the instrument address when connected to a ModBUS compatible monitoring system.
Rel **Release software:** (read only) Software version of the microprocessor.
Ptb **Parameter table:** (read only) it shows the original code of the **dixell** parameter map.
Prd **Probes display:** (read only) display the temperature values of the evaporator probe Pb2 and the auxiliary probe Pb3.
Pr2 **Access to the protected parameter list** (read only).

DIGITAL INPUTS

The Wing series can support up to 2 free contact digital inputs. One is always configured as door switch, the second is programmable in seven different configurations by the "**I2F**" parameter.

DOOR SWITCH INPUT

It signals the door status and the corresponding relay output status through the "**odc**" parameter:
no = normal (any change);
Fan = Fan OFF;
CPr = Compressor OFF;
F_C = Compressor and fan OFF.
Since the door is opened, after the delay time set through parameter "**dOA**", the alarm output is enabled and the display shows the message "**dA**". The alarm stops as soon as the external digital input is disabled again. During this time and then for the delay "**dot**" after closing the door, the high and low temperature alarms are disabled.

CONFIGURABLE INPUT - GENERIC ALARM (EAL)

As soon as the digital input is activated the unit will wait for "**did**" time delay before signalling the "**EAL**" alarm message. The outputs status don't change. The alarm stops just after the digital input is de-activated.

CONFIGURABLE INPUT - SERIOUS ALARM MODE (BAL)

When the digital input is activated, the unit will wait for "**did**" delay before signalling the "**BAL**" alarm message. The relay outputs are switched OFF. The alarm will stop as soon as the digital input is de-activated.

CONFIGURABLE INPUT - PRESSURE SWITCH (PAL)

If during the interval time set by "**did**" parameter, the pressure switch has reached the number of activation of the "**nPS**" parameter, the "**PAL**" pressure alarm message will be displayed. The compressor and the regulation are stopped. When the digital input is ON the compressor is always OFF.

CONFIGURABLE INPUT - START DEFROST (DFR)

It executes a defrost if there are the right conditions. After the defrost is finished, the normal regulation will restart only if the digital input is disabled otherwise the instrument will wait until the "Mdf" safety time is expired.

CONFIGURABLE INPUT - RELAY AUX ACTUATION (AUS)

This function allows to turn ON and OFF the auxiliary relay by using the digital input as external switch.

CONFIGURABLE INPUT - ENERGY SAVING (ES)

The Energy Saving function allows to change the set point value as the result of the SET+ HES (parameter) sum. This function is enabled until the digital input is activated.

CONFIGURABLE INPUT - REMOTE ON/OFF (ONF)

This function allows to switch ON and OFF the instrument.

DIGITAL INPUTS POLARITY

The digital inputs polarity depends on "**I1P**" and "**I2P**" parameters.
CL : the digital input is activated by closing the contact.
OP : the digital input is activated by opening the contact

INSTALLATION AND MOUNTING

Instruments **XW270L**, **XW271L** shall be mounted on vertical panel, in a 150x31 mm hole, and fixed using two screws ∅ 3 x 2mm. To obtain an IP65 protection grade use the front panel rubber gasket (mod. RG-L). The temperature range allowed for correct operation is 0 - 60 °C. Avoid places subject to strong vibrations, corrosive gases, excessive dirt or humidity. The same recommendations apply to probes. Let the air circulate by the cooling holes.

CUT OUT

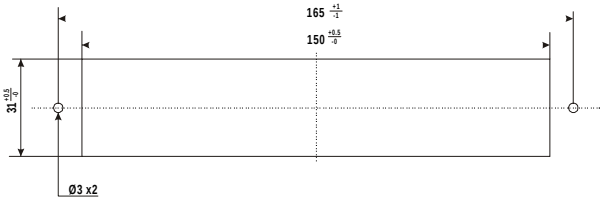

MOUNTING WITH KEYBOARD COVER OPENING DOWNWARD

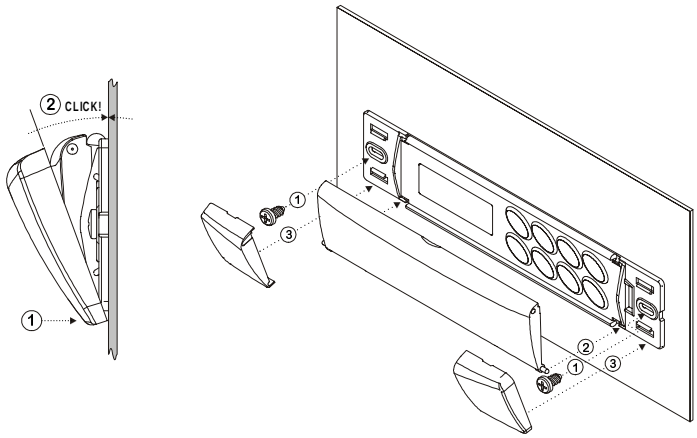

MOUNTING WITH KEYBOARD COVER OPENING UPWARD

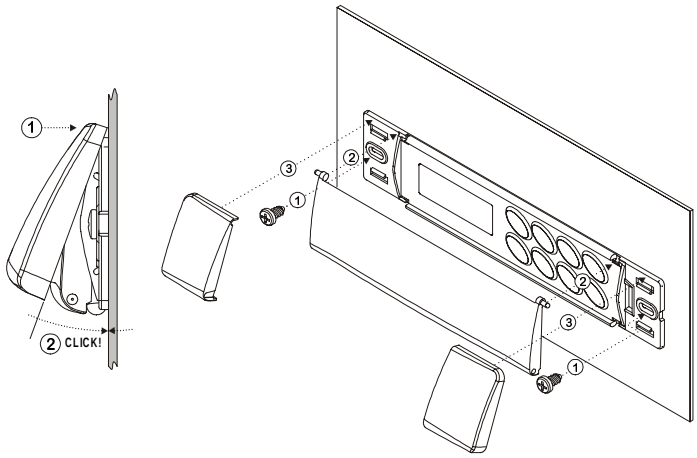

ELECTRICAL CONNECTIONS

The instruments are provided with screw terminal block to connect cables with a cross section up to 2,5 mm² for the digital and analogue inputs. Relays and power supply have a Faston connection (6,3mm). Heat-resistant cables have to be used. Before connecting cables make sure the power supply complies with the instrument's requirements. Separate the probe cables from the power supply cables, from the outputs and the power connections. Do not exceed the maximum current allowed on each relay, in case of heavier loads use a suitable external relay.
N.B. Maximum current allowed for all the loads is 20A.

PROBE CONNECTIONS

The probes shall be mounted with the bulb upwards to prevent damages due to casual liquid infiltration. It is recommended to place the thermostat probe away from air streams to correctly measure the average room temperature. Place the defrost termination probe among the evaporator fins in the coldest place, where most ice is formed, far from heaters or from the warmest place during defrost, to prevent premature defrost termination.

TTL SERIAL LINE

The TTL connector allows, by means of the external module TTL/RS485, to connect the unit to a network line **ModBUS-RTU** compatible as the **dixell** monitoring system XJ500 (Version 3.0).
The same TTL connector is used to upload and download the parameter list of the "**HOT KEY**".

USE OF THE PROGRAMMING "HOT KEY "

The Wing units can UPLOAD or DOWNLOAD the parameter list from its own E2 internal memory to the **"Hot Key"** and vice-versa.

DOWNLOAD (FROM THE "HOT KEY" TO THE INSTRUMENT)

1. Turn OFF the instrument by means of the ON/OFF key, remove the TTL serial cable if present, insert the **"Hot Key"** and then turn the Wing ON.
2. Automatically the parameter list of the **"Hot Key"** is downloaded into the Wing memory, the "**DoL**" message is blinking. After 10 seconds the instrument will restart working with the new parameters.
3. Turn OFF the instrument remove the **"Hot Key",** plug in the TTL serial cable, then turn it ON again.

At the end of the data transfer phase the instrument displays the following messages:
"**end** " for right programming. The instrument starts regularly with the new programming.
"**err**" for failed programming. In this case turn the unit off and then on if you want to restart the download again or remove the "**Hot key**" to abort the operation.

UPLOAD (FROM THE INSTRUMENT TO THE "HOT KEY")

1. Turn OFF the instrument by means of the ON/OFF key and remove the TTL serial cable if present; then turn it ON again.
2. When the Wing unit is ON, insert the "**Hot key**" and push ▲ key; the **"uPL"** message appears.
3. Push "**SET"** key to start the UPLOAD; the "**uPL**" message is blinking.
4. Turn OFF the instrument remove the **"Hot Key",** plug in the TTL serial cable, then turn it ON again.

At the end of the data transfer phase the instrument displays the following messages:
"**end** " for right programming.
"**err**" for failed programming. In this case push "SET" key if you want to restart the programming again or remove the not programmed "**Hot key**".

ALARM SIGNALS

Message	Cause	Outputs
"P1"	Thermostat probe failure	Alarm output ON; Compressor output according to parameters "COn" and "COF"
"P2"	Evaporator probe failure	Alarm output ON; Other outputs unchanged
"P3"	Auxiliary probe failure	Alarm output ON; Other outputs unchanged
"HA"	Maximum temperature alarm	Alarm output ON; Other outputs unchanged
"LA"	Minimum temperature alarm	Alarm output ON; Other outputs unchanged
"EE"	Data or memory failure	Alarm output ON; Other outputs unchanged
"dA"	Defrost timeout alarm	Alarm output ON; Other outputs unchanged
"dAL"	Door switch alarm	Alarm output ON; Other outputs unchanged
"EAL"	External alarm	Alarm output ON; Other outputs unchanged
"BAL"	Serious external alarm	Alarm output ON; Other outputs OFF
"PAL"	Pressure switch alarm	Alarm output ON; Other outputs OFF

The alarm message is displayed until the alarm condition is recovery.
All the alarm messages are showed alternating with the room temperature except for the "P1" which is flashing.
To reset the "EE" alarm and restart the normal functioning press any key, the "**rSt**" message is displayed for about 3s.

SILENCING BUZZER / ALARM RELAY OUTPUT

If "**tbA = y**", once the alarm signal is detected the buzzer and the relay are is silenced by pressing any key.
If "**tbA = n**", only the buzzer is silenced while the alarm relay is on until the alarm condition recovers.

"EE" ALARM

The **dixell** instruments are provided with an internal check for the data integrity. Alarm "EE" flashes when a failure in the memory data occurs. In such cases the alarm output is enabled.

ALARM RECOVERY

Probe alarms : "**P1**" (probe1 faulty), "**P2**" and "**P3**"; they automatically stop 10s after the probe restarts normal operation. Check connections before replacing the probe.
Temperature alarms "**HA**" and "**LA**" automatically stop as soon as the thermostat temperature returns to normal values or when the defrost starts.
Door switch alarm "**dA**" stop as soon as the door is closed.
External alarms "**EAL**", "**BAL**" stop as soon as the external digital input is disabled "**PAL**" alarm is recovered by switching OFF the instrument.

TECHNICAL DATA

Housing: self extinguishing ABS.
Case: facia 38x185 mm; depth 76mm
Mounting : panel mounting in a 150x31 mm panel cut-out with two screws. ∅ 3 x 2mm.
Distance between the holes 165mm
Protection: IP20.
Frontal protection: IP65 with frontal gasket mod RG-L. (optional)
Connections: Screw terminal block ≤ 2,5 mm² heat-resistant wiring and 6,3mm Faston
Power supply: 230Vac or. 110Vac ± 10%
Power absorption: 7VA max.
Display: 3 digits, red LED, 14,2 mm high.
Inputs: 3 NTC probes
Digital inputs: 2 free voltage
Relay outputs: ***Total current on loads MAX. 20A***
compressor: relay SPST 20(8) A, 250Vac
light: relay SPST 16(3) A, 250Vac
fans: relay SPST 8(3) A, 250Vac
defrost: relay SPST 8(3) A, 250Vac
alarm: SPST relay 8(3) A, 250Vac
auxiliary: SPST relay 16(3) A, 250Vac
Other output : alarm buzzer
Serial output : TTL standard
Communication protocol: Modbus - RTU
Data storing: on the non-volatile memory (EEPROM).
Kind of action: 1B.
Pollution grade: normal
Software class: A.
Operating temperature: 0÷60 °C.
Storage temperature: -25÷60 °C.
Relative humidity: 20÷85% (no condensing)
Measuring and regulation range: NTC probe: -40÷110°C (-58÷230°F)
Resolution: 0,1 °C or 1°C or 1 °F (selectable).
Accuracy (ambient temp. 25°C): ±0,5 °C ±1 digit

CONNECTIONS

XW270L/XW271L

(*) In XW271L, AUX is an anticondensing heater

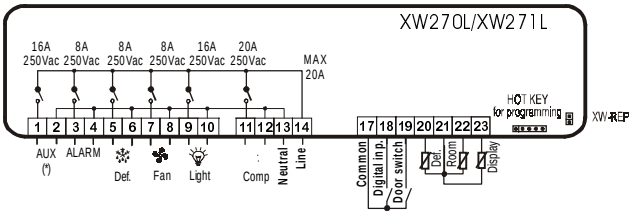

DEFAULT SETTING VALUES

Label	Name	Range	Default	Level	
	REGULATION		**°C/°F**	**XW270L**	**XW271L**
Set	Set point	LS÷US	-5	Pr1	Pr1
Hy	Differential	0,1÷25,5 °C / 1÷45°F	2	Pr1	Pr1
LS	Minimum set point	-50,0°C÷SET / -58°F÷SET	-30	Pr2	Pr2
US	Maximum set point	SET ÷ 110°C / SET ÷ 230°F	20	Pr2	Pr2
OdS	Outputs activation delay at start up	0÷255 min.	1	Pr2	Pr2
AC	Anti-short cycle delay	0÷30 min.	1	Pr1	Pr1
CCt	Compressor ON time during fast freezing	0 ÷ 23h 50 min.	0	Pr2	Pr2
COn	Compressor ON time with faulty probe	0÷255 min.	15	Pr2	Pr2
COF	Compressor OFF time with faulty probe	0÷255 min.	30	Pr2	Pr2
	DISPLAY				
CF	Temperature measurement unit	°C ÷ °F	°C	Pr2	Pr2
rES	Resolution (integer/decimal point)	in ÷ de	de	Pr1	Pr1
Lod	Local display	P1 ÷ 1r2	P1	Pr2	Pr2
Red	Remote display	P1 ÷ 1r2	P1	Pr2	Pr2
	DEFROST				
tdF	Defrost type	rE, rT, in	rE	Pr1	Pr1
EdF	Defrost mode	In, Sd	In	Pr2	Pr2
SdF	Set point for SMART DEFROST	-30 ÷ +30°C / -22÷+86°F	0	Pr2	Pr2
dtE	Defrost termination temperature (1°Evaporator)	-50,0÷110°C/ -58÷230°F	8	Pr1	Pr1
IdF	Interval between defrost cycles	1÷120h	6	Pr1	Pr1
MdF	(Maximum) length for 1° defrost	0÷255 min.	30	Pr1	Pr1
dFd	Displaying during defrost	rt, it, SEt, dEF, dEG	it	Pr2	Pr2
dAd	MAX display delay after defrost	0÷255 min.	30	Pr2	Pr2
Fdt	Draining time	0÷60 min.	0	Pr2	Pr2
dPO	First defrost after start up	n ÷ y	n	Pr2	Pr2
dAF	Defrost delay after fast freezing	0 ÷ 23h 50 min.	2	Pr2	Pr2
	FANS				
FnC	Fans operating mode	C-n, C-y, O-n, O-y	O-n	Pr2	Pr2
Fnd	Fans delay after defrost	0÷255 min.	10	Pr2	Pr2
FSt	Fans stop temperature	-50,0÷110°C/ -58÷230°F	2	Pr2	Pr2
	ALARMS				
ALC	Temperature alarms configuration	rE÷Ab	rE	Pr2	Pr2
ALU	MAXIMUM temperature alarm	-50,0÷110°C/ -58÷230°F	10	Pr1	Pr1
ALL	minimum temperature alarm	-50,0÷110°C/ -58÷230°F	10	Pr1	Pr1
AFH	Temperature alarm and fan differential	0,1÷25,5 °C / 1÷45°F	2		
ALd	Temperature alarm delay	0÷255 min.	15	Pr2	Pr2
dAO	Delay of temperature alarm at start up	0 ÷ 23h 50 min.	1,3	Pr2	Pr2
EdA	Alarm delay at the end of defrost	0÷255 min.	30	Pr2	Pr2
dot	Delay of temperature alarm after closing the door	0÷255 min.	15	Pr2	Pr2
dOA	Open door alarm delay	0÷255 min.	15	Pr2	Pr2
tBA	Alarm relay silencing	y ÷ n	y	Pr2	Pr2
nPS	Pressure switch activation number	0÷15	0	Pr2	Pr2
	ANALOGUE INPUTS				
Ot	Thermostat probe calibration	-12,0÷12,0°C / -21÷21°F	0	Pr1	Pr1
OE	Evaporator probe calibration	-12,0÷12,0°C / -21÷21°F	0	Pr2	Pr2
O3	Auxiliary probe calibration	-12,0÷12,0°C / -21÷21°F	0	Pr2	Pr2
P2P	Evaporator probe presence	n ÷ y	y	Pr2	Pr2
P3P	Auxiliary probe presence	n ÷ y	n	Pr2	Pr2
HES	Temperature increase during the Energy Saving cycle	-30÷30°C / -22÷86°F	0	Pr2	Pr2
	DIGITAL INPUTS				
Odc	Open door control	no, Fan, CPr, F_C	Fan	Pr2	Pr2
I1P	Door switch polarity	CL÷OP	CL	Pr2	Pr2
I2P	Configurable digital input polarity	CL÷OP	CL	Pr2	Pr2
i2F	Digital input configuration	EAL, bAL, PAL, dFr, AUS, ES, OnF	EAL	Pr2	Pr2
dId	Digital input alarm delay	0÷255 min.	5	Pr2	Pr2
SAA	Set point for anti-condensing heater	-50,0÷110°C/ -58÷230°F	-20.0	- - -	Pr2
	OTHER				
Adr	Serial address	0÷247	1	Pr1	Pr1
rEL	Software release	- - -	1.0	Pr2	Pr2
Ptb	Map code	- - -	- - -	Pr2	Pr2
Prd	Probes display	Pb1÷Pb3	- - -	Pr2	Pr2
Pr2	Access parameter list	- - -	- - -	Pr2	Pr2

Dixell s.r.l. Via dell'Industria, 27 - 32010 Z.I Pieve d'Alpago (BL) ITALY
tel. +39 - 0437 - 98 33 - fax +39 - 0437 - 98 93 13 - E-mail:dixell@dixell.com - http://www.dixell.com